ISSN 2395-1621

Power generation with the help of suspension system (energy harvesting shock absorber)

#1G. P. Dhalwar, #2T. A. Jadhav

1shyamdhalwar@gmail.com

2tajadhav.scoe@sinhgad.edu

#12 PG Scholar Department of Mechanical Engineering (Automotive engineering), Savitribai Phule Pune University

Sinhgad college of engineering, Pune-41

ABSTRACT

The energy produced by road roughness is dissipated through shock absorbers. Energy-harvesting shock absorber is capable for recovering that energy. It absorbs road vibrations and converts it into electrical energy. In this paper, design of regenerative suspension system is proposed, for improving the energy harvesting efficiency. Mechanical motion rectifier is used to convert oscillatory vibration into unidirectional rotation of generator. Static structural analysis is carried out to identify displacement and stresses by using software. In this project, a mechanical rack and pinion system is used to generate power through regenerative shock absorber. The validation is done by using experimental evaluation. The model achieved more than 50% efficiency at high frequency in oscillatory motion. This model can be used effectively in vehicles for power generation.

Keywords— **DC motor, Energy harvesting shock absorber, Mechanical motion rectifier, Regenerative shock absorbers, Rack and pinion**

ARTICLE INFO

Article History

Received :18th November 2015

Received in revised form :

19th November 2015

Accepted : 21st November , 2015

Published online :

22nd November 2015

I. INTRODUCTION

The transportation requires 70% of fuel consumption. Exhaust causes more air pollution. Considering only 10-16% of fuel energy is used to drive vehicles. The improvement of fuel efficiency is always an important issue. Recently research indicates that vehicle suspensions have important effect on fuel efficiency. Through modeling and road tests it is estimated that 100-400 Watts of energy harvesting potential exist in suspension of passenger vehicles traveling at 60 miles per hours more energy is available for trucks on the rough roads. Function of suspension system is to support weight of vehicle body, to avoid road disturbances. Conventionally, damper is designed to convert vibration energy into heat transmitted from road excitation. However, dissipated heat is from fuel or electrical power. It is bad that so much energy is wasted.

Dampers also called shock absorber, they are key components to damp the vibration which is transmitted from ground. Dampers are design to reduce sudden effects of road disturbance to achieve a smooth ride. Electromagnetic damper will transform energy into electricity and store it. The stored electricity can be used in power car electronics to increase vehicle fuel efficiency [1]. Consumption of fuel has been important since beginning of the transportation facility. Number of efforts has been made partially use energy stored in springs. System design considering actual measured data on vehicle at various roads for both load and unload applications [2]. Rack-pinion converts linear motion into rotation. The experiment results indicated that limited speed and handling performance of vehicle had been enhanced significantly. Pei designed rack-pinion damper incorporating bevel gear for changing motor axes to parallel with orient of linear

© 2015, IERJ All Rights Reserved

motion. [3]. Energy-regenerative suspension using rotary DC motor as actuator was proposed, among which rack and pinion mechanism was applied to convert linear motion of suspension into rotary motion of DC-motor. This configuration provides nonlinear damping force by power electronic circuits [4]. In direct-drive electromagnetic suspension, linear permanent magnets motor is used to replace traditional shock absorber. It turns the mechanical energy of relatively motion between vehicle chassis and wheel into electric energy needing no transmission devices. Active and regenerative vibration control suspension using linear actuator and its performances of vibration isolation and energy regeneration were analyzed [5]. Mechanical regenerative suspension absorbs kinetic energy of suspension and converts into potential hydraulic energy to store. Nissan developed a fully active suspension system with hydraulic actuators, which suppresses the suspension vibration [6]. Much of energy is dissipated by shock absorbers of vehicle suspension which is not known, according to reference, only 10-20% the fuel energy is used for vehicle mobility. Energy dissipated by suspension dampers is related with road roughness, vehicle speed, suspension stiff and damping coefficient. The energy dissipation by passenger vehicle show that total power of four dampers was about 200W, when running on a poor road at a speed of 13.4m/s. These data indicate energy dissipation of vehicle suspension can't be ignored [7]. Energy consumption of passive and active suspension of car under conditions that vehicle speed was 20m/s, road roughness was class C, simulation time was 20s, indicated passive suspension is 651 kJ, while 645 kJ for active suspension which decreased RMS of sprung mass acceleration by 50%. If suspension vibration energy can be recycled, energy consumption of active suspension will be reduced effectively. Theoretical results show a maximum of 10 % fuel efficiency can be recovered from regenerative shock absorbers [8]. The vibration energy of suspension is dissipated as heat by shock absorber, which wastes a considerable number of resources. Regenerative suspensions bring hope for recycling wasted energy. With improvement of technology, regenerative suspension may become one of promising trends of vehicle industry [9]. Based on rack–pinion mechanical motion rectifier is used to convert the oscillatory vibration into unidirectional rotation of the generator and this prototype's regenerative efficiency is more than 50% at high frequency excitation [10]. Idea of extracting energy from operating suspension is being brought to concept and its practical feasibility is overviewed for potential energy saving from power pack. Theoretically results show an availability of energy in the road data, which could be utilized to store energy in form of compressed air, which by integrating with braking circuit of vehicle will reduce the load on engine to meet the compressed air requirement that supports the conventional braking system [11]. This mechanism includes rack and pinion. Bidirectional oscillation will cause large impact force and friction in the transmission system, causing the fatigue or even failure. The bidirectional oscillating motion will produce an irregular AC voltage. In order to charge batteries voltage needs to be commutated with electrical rectifier. By using concept of "mechanical motion rectifier" which convert bidirectional motion into unidirectional motion. It can improve the reliability by reducing impact forces and increase efficiency by decreasing the influences of friction.

Principle of Motion Rectifier:

Conventional rotational regenerative shock absorbers translate suspension oscillatory vibration into bidirectional rotation. Fig.1.1 shows rotary motion is changed by 90 degree with a pair of bevel gears.

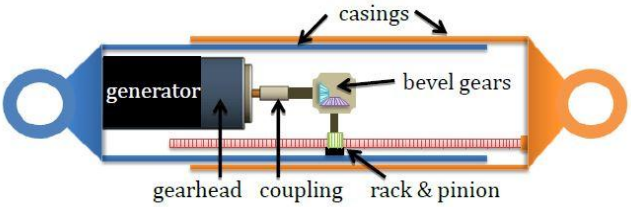

Fig.1-Traditional design of a rack-pinion based regenerative shock absorber [14]

Motion rectifier is created to create oscillatory motion. We can define functioning of the "motion rectifier" with two working modes: positive and negative mode. Motion rectifiers are one-way roller that transmits rotation only in one direction. In order to keep regenerative shock absorbers compact enough, motion transmission needs to fit into the existing space of shock absorber. In addition, decrease number of gear pairs and shafts to improve mechanical efficiency.

When the rack moves up and down, the pinion and shaft rotate clockwise and counterclockwise directions. Due to engagement of the one-way roller clutches, at an instant time flywheel engaged and be driven by the shaft. These bevel gears will be driven in opposite direction by the flywheel and gear. Since the large bevel gears are in two opposite sides of the small bevel gears, the smaller bevel gear coupled to it will always be driven by either left or right bevel gears and will rotate in one direction no matter the rack goes up or down. The assembly of pinion, shaft, and bevel gears will be mounted into cylinder with piston to guide the linear motion. The rack is preloaded and guided by a roller in the place opposite to the pinion. The enclosed construction of the shock absorber prevents dirt from hurting gears inside. The working mechanism is to generate power by converting kinetic energy generated by vehicle going up on a speed breaker into potential energy. When the vehicle moves over breakers, it gains height resulting in increase in kinetic energy, which is wasted in a conventional suspension. When the suspension moves up and down, rack moves 3inch linearly. Ratchet is a mechanical device that allows continuous linear or rotary motion in only one direction. Rack and ratchet gears give a positive motion especially compared to the friction drive. Shaft is connected to flywheel with ratchet-wheel type mechanism. The output of this shaft is coupled to a dynamo to convert rotational energy into electricity with help of bevel gears. A vehicle loaded with 1,000 kg going up a height of 10 cm on such a rough roads produces approximately 0.98 kilowatt power.

© 2015, IERJ All Rights Reserved

II.PROBLEM STATEMENT

Continuously increasing energy prices and concerns about energy security and climate change have draw interest in alternatives to transport systems run on fossil fuels. Electric vehicles have emerged as the preferred alternative. Ability of vehicles is to take power directly from the power grid. The energy storage capacity of battery used in electric vehicle is very low compare to conventional fuels used in modern automobiles. The operation, performance and efficiency of motor driven electric vehicles are much better than engine driven vehicles, at the same time electric vehicles are very much environment friendly. Still electric vehicles are falling behind in automobile industries due to the problem of storage of energy.

PROPOSED WORK AND METHODOLOGY

- The goal is to develop a working model of 'Battery charging suspension'
- Develop a CAD model of the system.
- Study of the displacements achieved by the suspension system using vehicle dynamics and to calculate the current produced by the generator.
- Development of Physical model.
- Experiments for results.

III. MODELING AND ANALSIS

CAD Model is to be prepared as per the concept explain for the regenerative shock absorber. In this rack, pinion, flywheel and bevel gears are arranged to work in effective way.

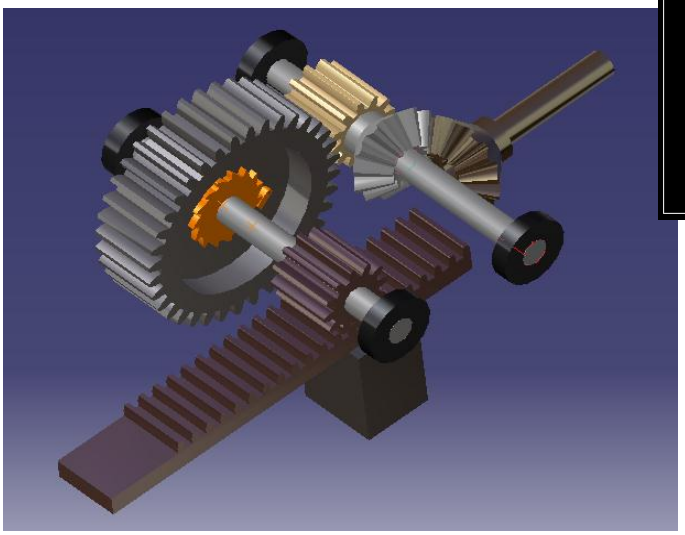

Fig.2- CAD Model of system

CAD Model is to be generated in CATIA V5R19 according to dimensions derived from calculations. Rack is designed of total length 4.5 inch and pinion has minimum12 numbers of teeth's. Flywheel is designed with 36 teeth's which helps to complete 2 rotations of pinion. It is provided with space for pawl and ratchets from one side. Meshing carried out in ansys-14.5 on the model design with meshing type tetrahedral and element size 2. Number of nodes and element are 24548 and 94448 respectively.

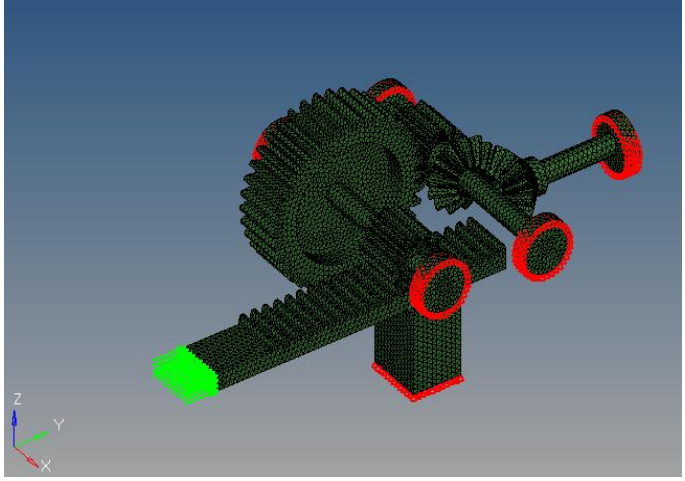

Fig.3- Meshed Model with boundary conditions

All supports are fixed by frictional less support only rack is allowed to move when load of 500 kg (single suspension) is to be applied. Static analysis results possible displacement in model and stresses after meshing which explains how much of stresses is to be sustained and achieved by system.

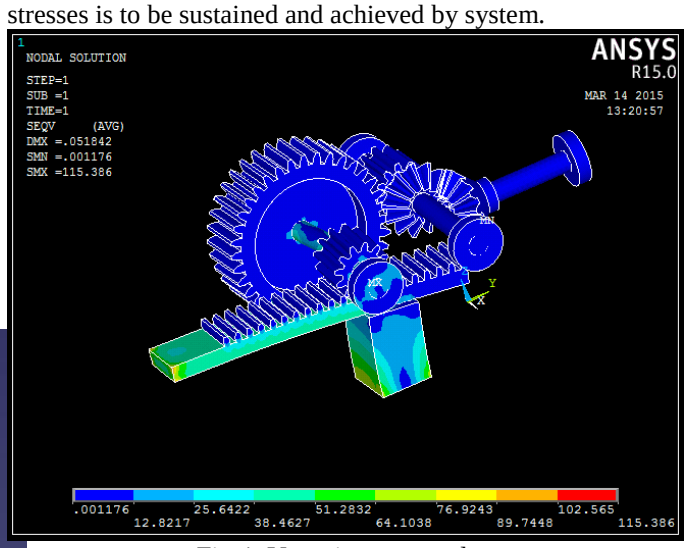

Fig.4- Vonmises stress plot

IV.DEVELOPEMENT AND WORKING OF MODEL

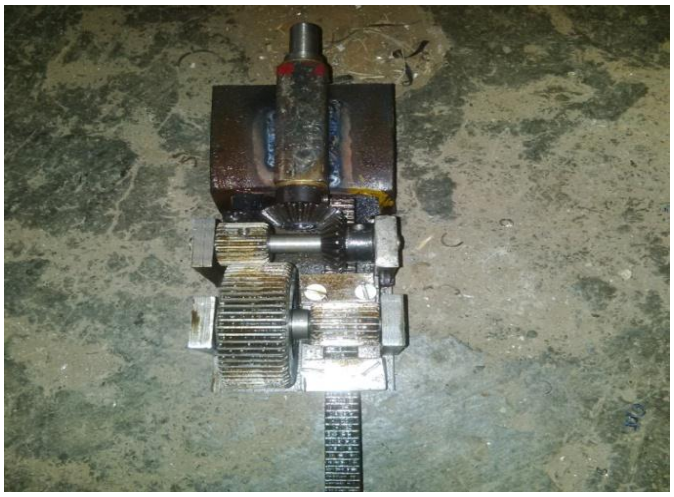

Fig.5- Developed model

The whole assembly is welded by supports on a plate to give it a stiffer platform. The pinion and the gear are mounted on a shaft first and then they are welded with supports to the platform. Rack is made to engage with the pinion for making the reciprocating motion. The pinion and bevel gear are assembled on another shaft by supports. Whole assembly is given a proper gear engagement as the Rack makes the motion they act accordingly. Bevel gear is attached perpendicularly and the rotations got from the oscillatory motion are now can be attached to the armature. Now whole assembly is enclosed

by a cylinder as piston arrangement and then they are fixed together. The dynamo or the armature is connected at the end of the cylinder to produce the electrical energy from mechanical energy some suspension test are to be carried out for results. These tests are carried on different speed to get better results.

V. CONCLUSIONS

In this paper, we proposed a rack and pinion based design of power generating suspension system to improve efficiency and reliability for potential application of vibration energy harvesting from vehicle suspensions. "Motion rectifier" can transfer the oscillatory motion of vehicle suspension into unidirectional motion of the electrical generator, thus enabling the generator operating in a relatively steady speed with higher efficiency.

An implementation of rack and pinion is introduced with high compactness and improved efficiency. Finally shock absorber is characterized with tests. Design achieves mechanical efficiency of over 50%. It also harvests average power. The experiment results indicate that advantage of "motion rectifier" is more important with higher input frequency, and the efficiency is higher correspondingly.

VI. SCOPE FOR FUTUCHR

Reduction in fuel consumption of an automobile which results in fuel saving. It is helpful to battery car to use energy while moving on roads for different accessories to run successfully.

ACKNOWLEDGMENT

Working with highly devoted teacher's community at Department of Mechanical Engineering, S.C.O.E., Pune will be most eventful and memorable experience of my life. The encouragement guidelines received from my teacher and guide Prof. T. A. Jadhav. Also very thankful to my automotive engineering coordinator, Prof. D. H. Burande for valuable suggestions. I am thankful of our Principal, Dr. S. D. Lokhande and HOD, Dr. H. V. Vankudre for providing amenities.

REFERENCES

[1] Lei Zuo, Scully, Shestani, and Zhou, 'Design and characterization of an electromagnetic energy harvester for vehicle suspensions', Smart Material and Structure, 19 (2010).

[2] Nakano, Suda and Nakadai, "Self-powered active vibration control using a single electric actuator", Journal of Sound and Vibration, 260(2003) , pp.213-235

[3] Suda Y, Shiiba T. A new hybrid suspension system with active control and energy regeneration. Veh Syst Dyn 1996;25(Suppl.):641–54.

[4] Suda Y, Shiiba T, Hio K, Kawamoto Y, Kondo T, Yamagata H. Study on electromagnetic damper for automobiles with nonlinear damping force characteristics (road test and theoretical analysis). Veh Syst Dyn 2004;41(suppl) :637–46.

[5] Jolly M, Margolis D, "Regenerative Systems for Vibration Control", Journal of Vibration and Acoustics, 1997, 119(2), pp. 208-215.

[6] Aoyama Y, Kawabate K, Hasegawa S., "Development of the Fully Active Suspension by Nissan", SAE Paper 901747.

[7] Segel L, Lu X P, "Vehicular Resistance to Motion as Influenced by Road roughness and Highway Alignment", Australian Road Research, 1982, 12(4), pp. 211-222.

[8] Velinsky, Steven A. and White, Robert A, "Vehicle Energy Dissipation Due to Road Roughness", Vehicle System Dynamics, 1980, 9:6, pp. 359-384.

[9] Pei S.Z., "Design of Electromagnetic Shock Absorbers for Energy Harvesting from Vehicle Suspensions", Master Degree Thesis, Stony Brook University, 2010.

[10] Z. Li, L. Zuo, J.Kuang, G. Luhrs, "Energy-harvesting shock absorber with a mechanical motion rectifier Smart Mater". Struct. 22(2)(2013)025008.

[11] Guoguang Zhang, Jianyong Cao, Fan Yu. School of Mechanical Engineering, Shanghai Jiao Tong University, Shanghai, PR China "Design of active and energy-regenerative controllers for DC-motor-based suspension" Mechatronics 22 (2012) 1124–1134.

[12] Suda Y, Shiiba T, "A New Hybrid Suspension System with Active Control and Energy Regeneration", Vehicle System Dynamics, 1996, 25(Sup. 1), pp.641-654.

[13] Li Z, Brindak Z, and Zuo L 2011 Modeling of an Electromagnetic Vibration Energy Harvester with Motion Magnification The ASME International Mechanical Engineering Congress and Exposition, Denver CO.

[14] Zuo L and Zhang P 2012 Energy Harvesting, Ride Comfort, and Road Handling of Regenerative Vehicle Suspensions", ASME Journal of Vibration and Acoustics, 2012, in print.

[15] http://machinedesign.com/article/vibration-testing-101-1201.

[16] Cassidy I, and Scruggs J 2011 Design of electromagnetic energy harvesters for large-scale structural vibration applications Proc. SPIE 7977, 79770P; doi:10.1117/12.880639.

[17] Energy Information Administration Basic Petroleum Statistics, http://www.eia.doe.gov/basics/

[18] Efatpenah K Beno JH and Nichols SP 2000 Energy requirements of a passive and an electromechanical active suspension system Vehicle System Dynamics 34, 437-458

[19] Zuo L and Zhang P 2012 Energy Harvesting, Ride Comfort, and Road Handling of Regenerative Vehicle Suspensions", ASME Journal of Vibration and Acoustics, 2012, in print.

© 2015, IERJ All Rights Reserved